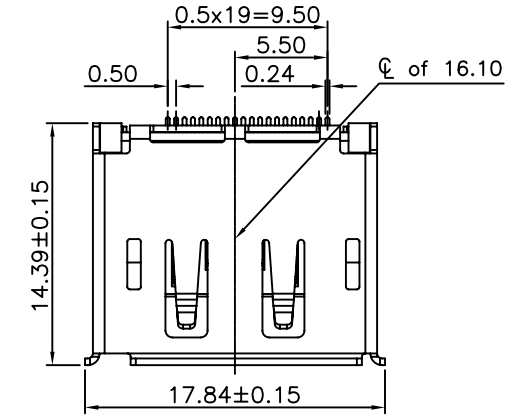

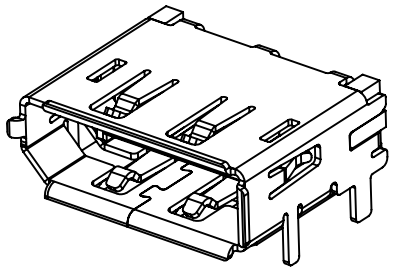

NOTE:
1.MATERIAL:
HOUSING:HIGH TEMPERATURE POLYESTER & GLASS FIBER UL94V-0 BLACK COLOR
CONTACT:COPPER ALLOY
SHELL:COPPER ALLOY
FINISH:
CONTACT: Au PLATING ON CONTACT AREA
SOLDERING AREA: TIN PLATING
SHELL: AU PLATING

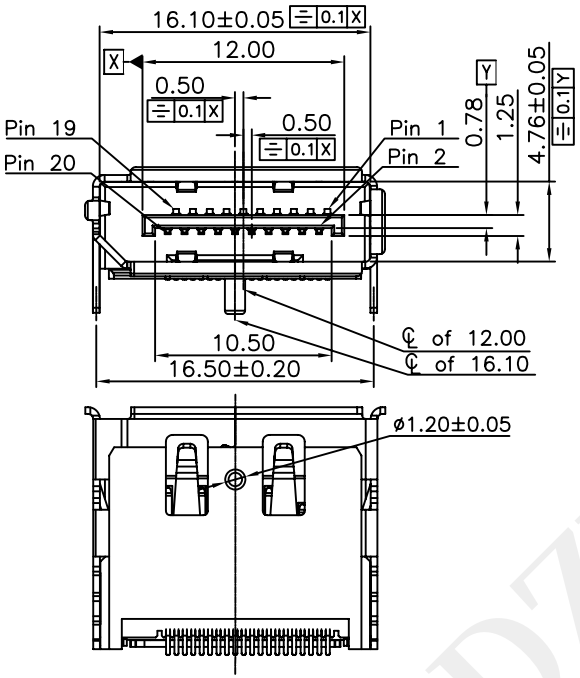

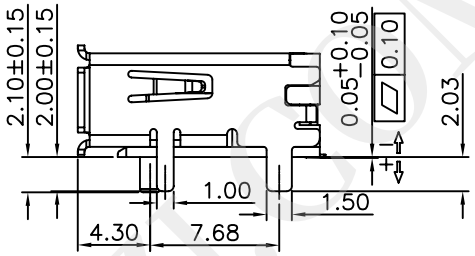

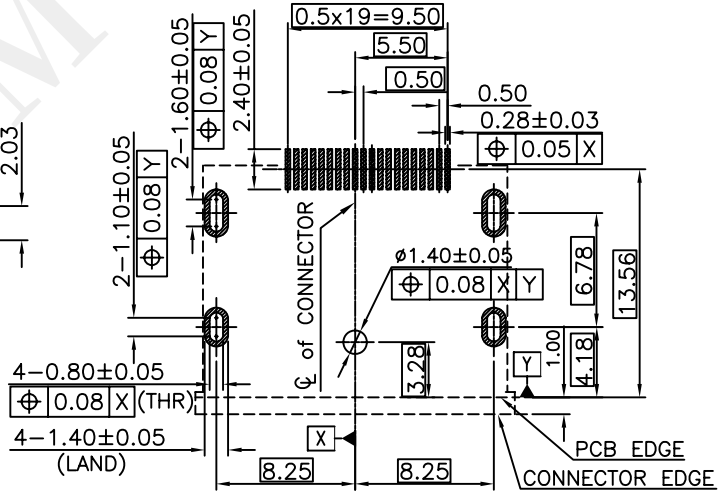

RECOMMENDED P.C.BOARD LAYOUT (TOP VIEW)
TOLERANCES UNLESS OTHERWISE SPEC.±0.05
Hole AREA KEEP OUT AREA

深圳市华宇创精密电子有限公司

TOLERANCE: X.X ±0.30, X.XX ±0.25, X.XXX ±0.15, X.° ±2°, X.X° ±0.5°	DRAWED BY : 陈一鸣	DATE : 2014-02-23	PART NAME: DP SMT 有弹无卡点
	CHECKED BY: 马跃	DATE : 2014-02-23	PART NO. HYC02-DP20-476
			MOLD NO.
UNIT: mm [inch]	APPROVED BY: 邱国夷	DATE : 2014-02-23	DRAW NO: HYC-DP13092110
SCALE:1:1 SIZE: A4			SHEET NO. 1 OF 1

WWW.DZYIZI.COM